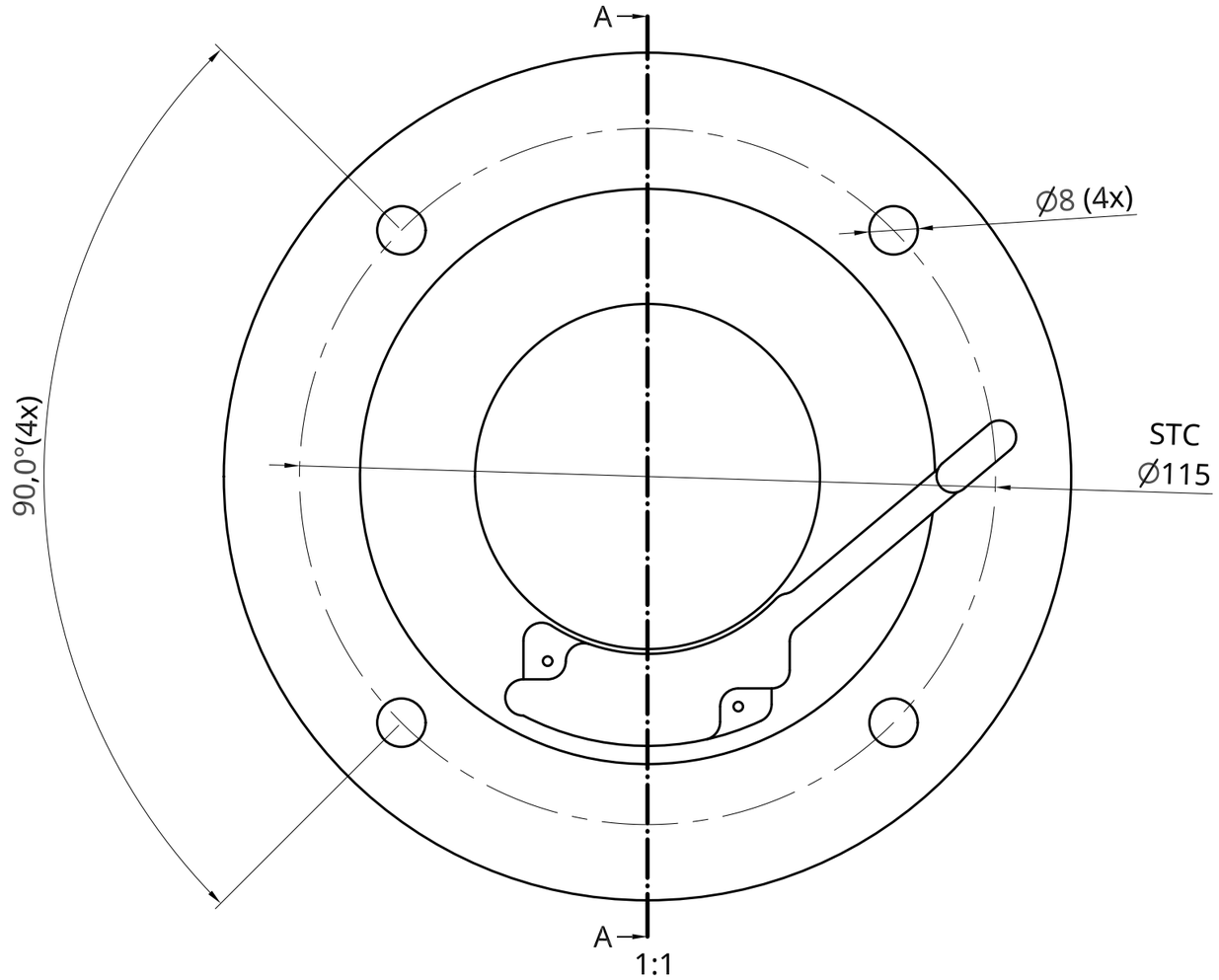

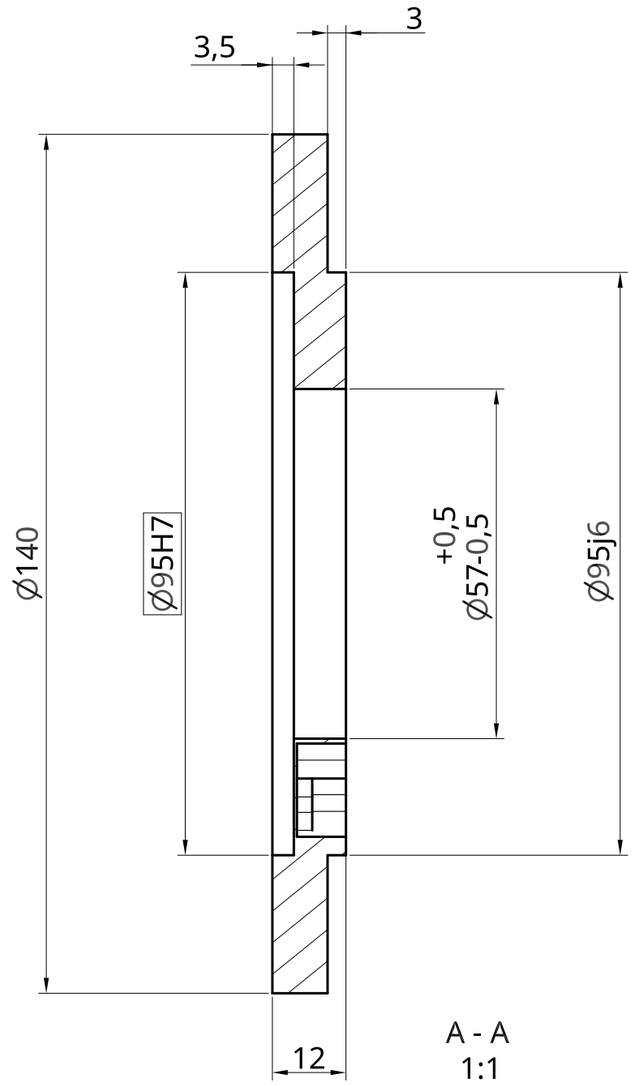

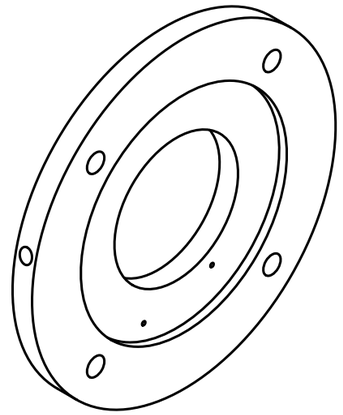

UNLESS OTHERWISE SPECIFIED, DIMENSIONS ARE IN MILLIMETERS		NAME	SIGNATURE	DATE
ANGULAR = ± °	DRAWN	Jip Lemmers		2017-08-30
SURFACE FINISH	CHECKED			
	APPROVED			
DO NOT SCALE DRAWING				
BREAK ALL SHARP EDGES AND REMOVE BURRS				
FIRST ANGLE PROJECTION	MATERIAL		FINISH	

TITLE

Flens ringpulsgever 063B5 (090B14a) ingegoten 4.0

SIZE	DWG NO.	REV.
A3		

SCALE	WEIGHT	SHEET
1:2		1 of 1