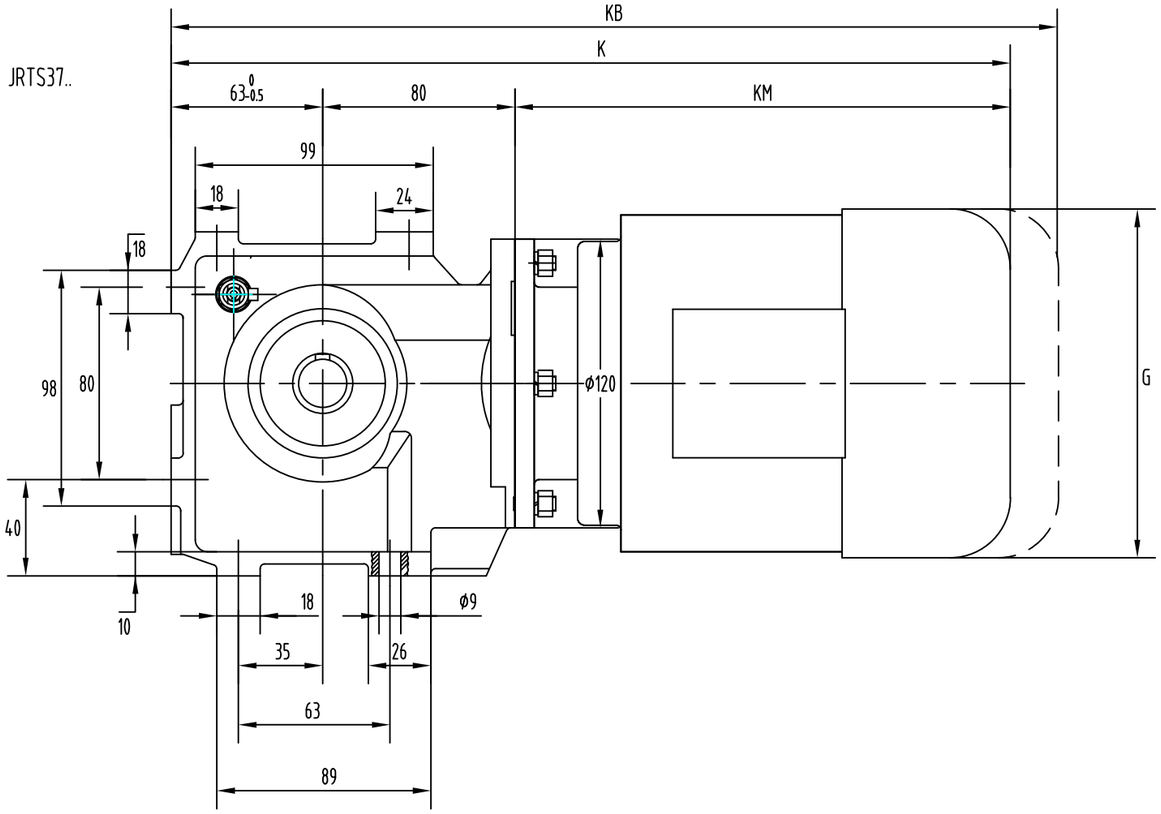

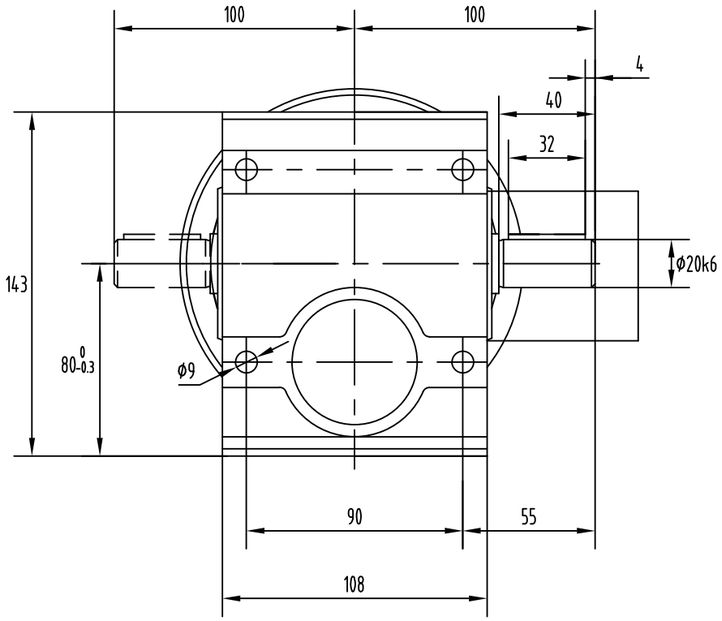

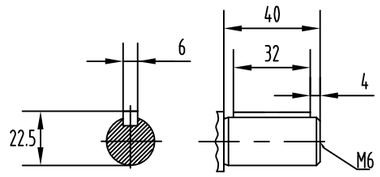

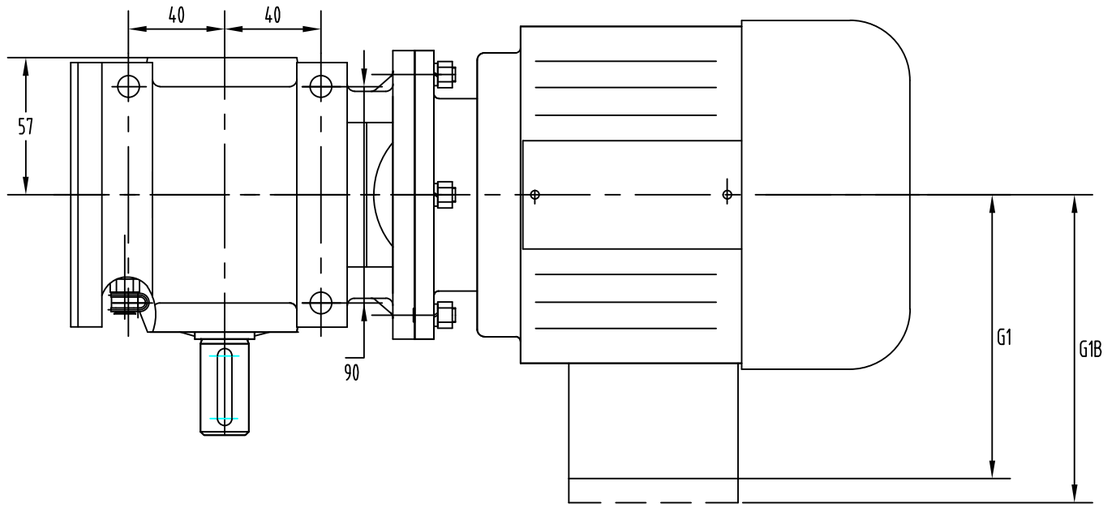

	DR63..	DT71D	DT80..	DT90..								
G (AC)	120	138	148	169								
G1 (AD)	95.2	103	108	138.5								
G1B												
K	364	382	413.5	457								
KB	411.5	432.5	464	513								
KM (LB)	221	239	270.5	314								

Pos.	Amount	Drawing nr.:	Material	Measurements
EURONORM DRIVE SYSTEMS			Units:	Drawn by:
			Scale: 1:2.5	Sheet:
			Date:	Revision:
Projection:	Format:		Title: JRTS37..	

COPYRIGHT EURONORM, THIS DOCUMENT CONTAINS CONFIDENTIAL AND PROPRIETARY INFORMATION WHICH, UNLESS OTHERWISE EXPRESSLY AGREED TO IN WRITING BY EURONORM, REMAINS THE SOLE PROPERTY OF EURONORM, AND MAY NOT BE DISCLOSED, COPIED, REDISTRIBUTED, RETRANSMITTED, PUBLISHED OR USED TO CREATE DERIVATIVE WORKS. 2013 EURONORM.

Euronorm – Jagtlustkade 8 – 2171AG Sassenheim – The Netherlands – Tel.: +31 (0)252 228 850 – Fax: +31 (0)252 228 235 – Email: Info@euronorm.nl – HTTP://www.euronorm.nl