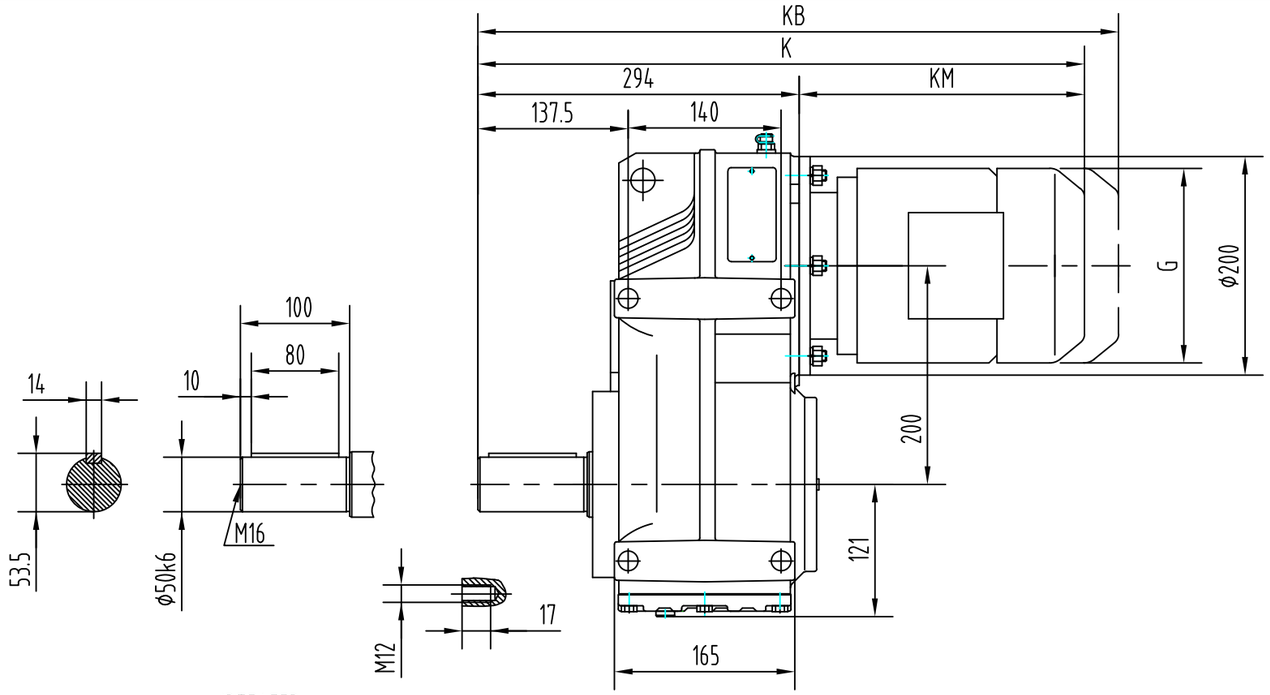

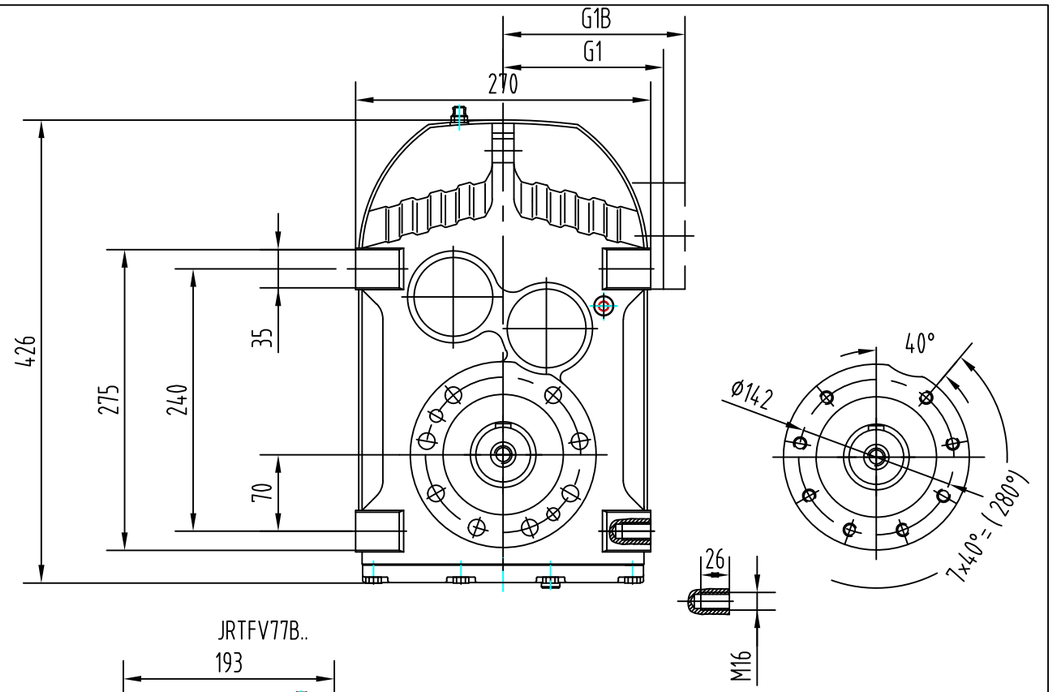

JRTFA77B..

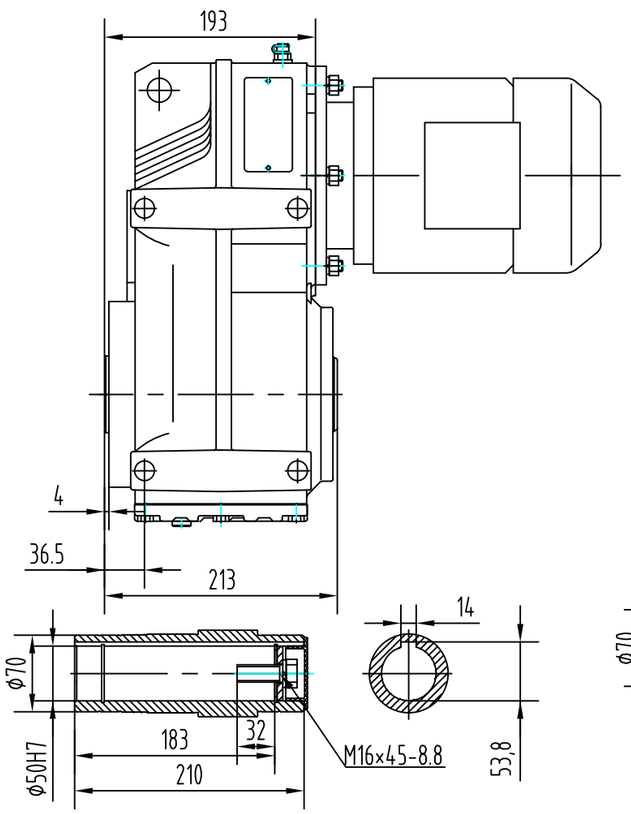

JRTFH77B..

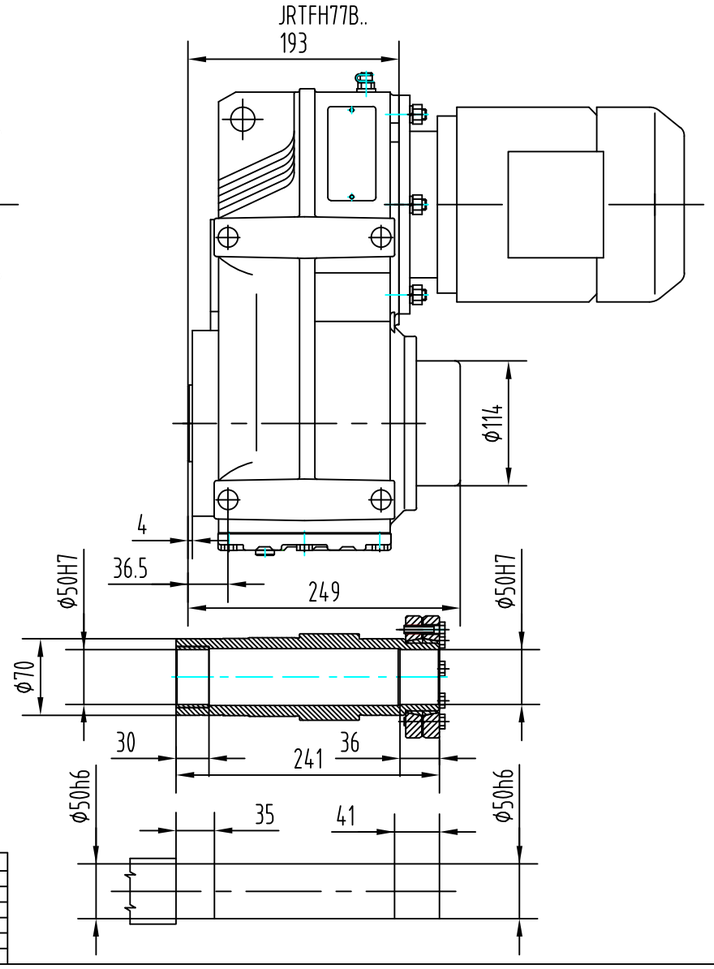

JRTFV77B..

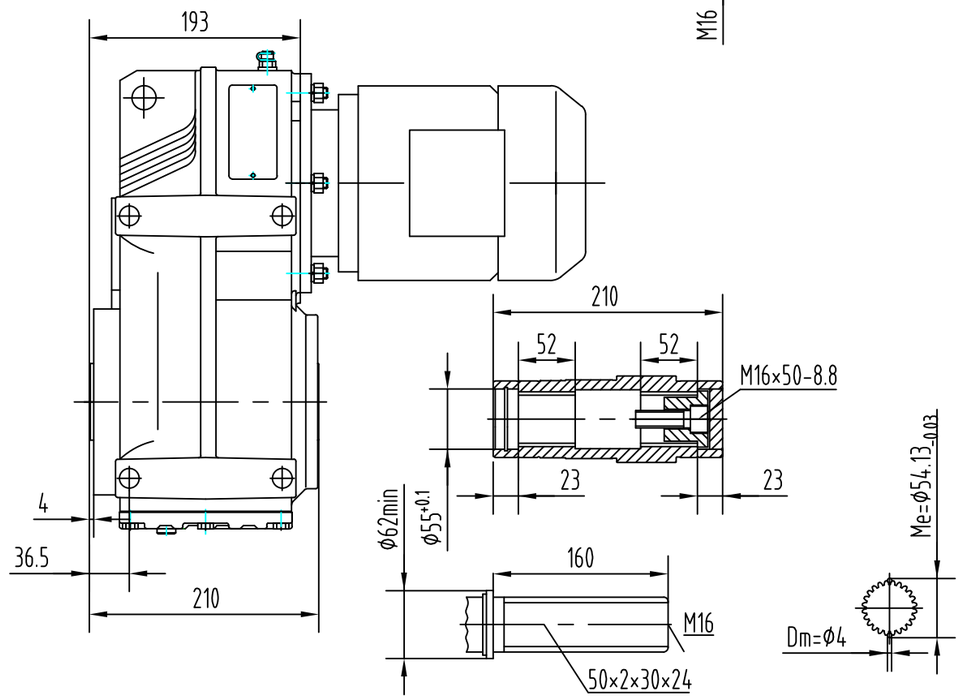

	DR63..	DT71D	DT80..	DT90..	DV100M	DV100L	DV112M	DV132S	DV132M	DV132ML	DV160M
G AC	120	138	148	169	193.4	193.4	213	255	255	255	330
G1 AD	95.2	103	108	138.5	131	131	150.5	167.7	167.7	167.7	255
G1B											
K	503.5	521.5	553	594.5	611.5	611.5	667	702	702	702	803
KB	551	572	603.5	650.5	693.5	693.5	752.5	795	795	795	899
KM LB	209.5	227.5	259	300.5	317.5	317.5	373	408	408	408	509

Pos.	Amount	Drawing nr.:	Material	Measurements
			Units:	Drawn by:
			Scale: 1:5.5	Sheet:
			Date:	Revision:
Projection:	Format:		Title: JRTF77..	

EURONORM DRIVE SYSTEMS

COPYRIGHT EURONORM, THIS DOCUMENT CONTAINS CONFIDENTIAL AND PROPRIETARY INFORMATION WHICH, UNLESS OTHERWISE EXPRESSLY AGREED TO IN WRITING BY EURONORM, REMAINS THE SOLE PROPERTY OF EURONORM, AND MAY NOT BE DISCLOSED, COPIED, REDISTRIBUTED, RETRANSMITTED, PUBLISHED OR USED TO CREATE DERIVATIVE WORKS. 2013 EURONORM.

Euronorm – Jagtlustkade 8 – 2171AG Sassenheim – The Netherlands – Tel.: +31 (0)252 228 850 – Fax: +31 (0)252 228 235 – Email: Info@euronorm.nl – HTTP://www.euronorm.nl