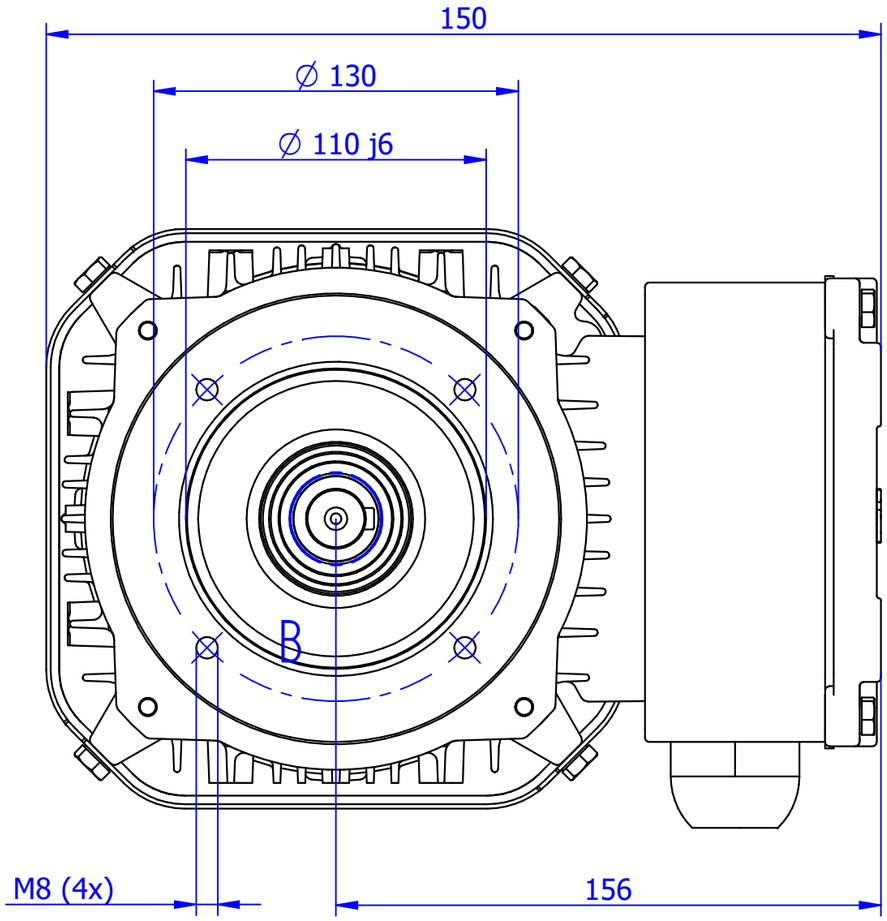

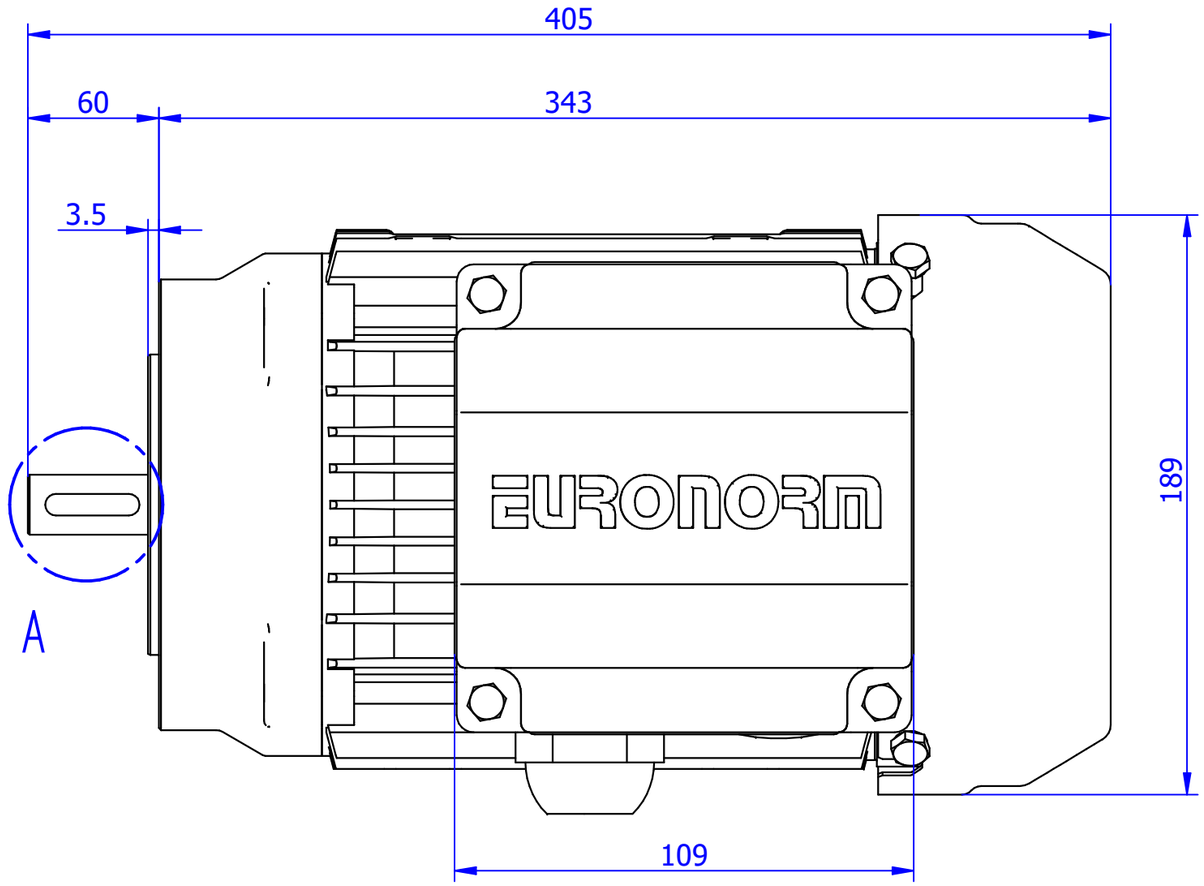

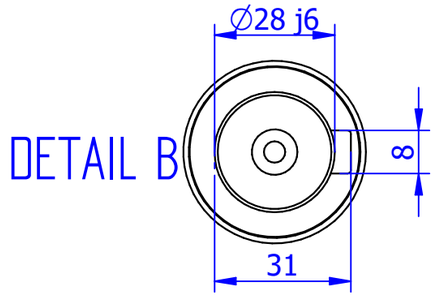

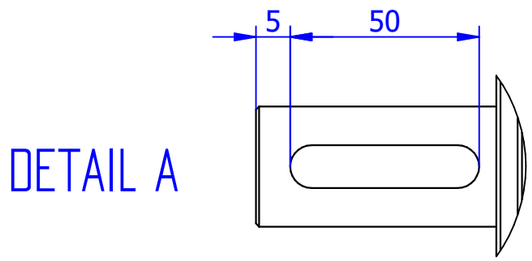

MOTOR SPECIFICATIONS	
Power [kW]:	3
Voltage [V]:	230/400
Rated speed [RPM]:	1400
Rated current [A]:	10,7/6,2
Duty cycle:	S1
Isulation class:	IP55
Torque [Nm]	15
Cos phi	0.81
Weight [kg]	21.5

DATE DRAWN: 8-01-20

DRAWING DESCRIPTION: EURONORM IEC 100 M B14 IE2 MOTOR

EURONORM DRIVE SYSTEMS

© EURNORM DRIVE SYSTEMS B.V.,
THIS DOCUMENT CONTAINS CONFIDENTIAL AND PROPRIETARY INFORMATION WHICH, UNLESS OTHERWISE EXPRESSLY AGREED TO IN WRITING BY EURONORM, REMAINS THE SOLE PROPERTY OF EURONORM, AND MAY NOT BE DISCLOSED, COPIED, REDISTRIBUTED, RETRANSMITTED, PUBLISHED OR USED TO CREATE DERIVATIVE WORKS.

PROJECTION:	DRAWN BY:	CONFIRMED BY:	SCALE:	SIZE:	REVISION:
THIRD PROJECTION	dmar				

ARTICLE CODE:	MATERIAL:	DIMENSIONS:	WEIGHT:	SHEET:
		XX [mm]		

EURONORM DRIVE SYSTEMS B.V. - Hub van doorneweg 8 - 2171 KZ - Sassenheim - The Netherlands - Tel: +31 (0)252 22 88 50 - Fax: +31(0)252 22 88 35 - info@euronorm.com